THE GENERAL BOARD

United States Forces, European Theater

Antiaircraft Artillery Section

ORGANIZATION AND EQUIPMENT

OF

ANTIAIRCRAFT ARTILLERY UNITS

Mission: Prepare Report and Recommendations on the Organization and Equipment of Antiaircraft Artillery Units.

The General Board was established by General Orders Number 128, Headquarters European Theater of Operations, U. S. Army, dated 17 June 1945, as amended by General Orders 182, dated 7 August 1945 and General Orders 312, dated 20 November 1945, headquarters United States Forces, European Theater, to prepare a factual analysis of the strategy, tactics, and administration employed by the United States forces in the European Theater.

File: R 370.2/54

Study Number 41

~~RESTRICTED~~

UNCLASSIFIED

TABLE OF CONTENTS

SUBJECT	PAGE
Part One: Introduction	1
1. Scope and Purpose	1
2. Present War Department Policy	1
Part Two: Narrative Report of Committee	2
Chapter 1. Basic Principles	2
Chapter 2. Adequacy of Present Antiaircraft Organization and Equipment	4
Chapter 3. Future Developments in Air Attack	11
Chapter 4. Conclusions and Recommendations	12
Part Three:	
Bibliography	15

Appendices:

1. Radio Equipment in Antiaircraft Artillery Organization.
2. Proposed Organization for Antiaircraft Artillery Regiment.
3. Proposed Organization for Antiaircraft Artillery Brigade.
4. Proposed Organization for Antiaircraft Artillery Division.
5. Proposed Organization for Antiaircraft Artillery Command.
6. Proposed Organization for Antiaircraft Artillery Automatic Weapons Battalion, Separate, Self-Propelled.

THE GENERAL BOARD
UNITED STATES FORCES, EUROPEAN THEATER

STUDY OF THE ORGANIZATION AND EQUIPMENT OF ANTIAIRCRAFT ARTILLERY UNITS

Prepared by:
Brig Gen C. H. Armstrong, Chief, Antiaircraft Artillery Section
Colonel D. J. Bailey, CAC
Colonel H. H. Wyrah, CAC
Colonel C. L. Partin, CAC
Major J. F. Dunn, CAC
Captain L. N. Arent, CAC

RESTRICTED

THE GENERAL BOARD
UNITED STATES FORCES, EUROPEAN THEATER

ORGANIZATION AND EQUIPMENT OF ANTIAIRCRAFT ARTILLERY UNITS

PART ONE

INTRODUCTION

1. Scope and Purpose. The purpose of this study is to determine what major changes in antiaircraft artillery organization and equipment are indicated by experience in the European Theater of Operations. Only operations in the European Theater commencing with the OVERLORD Appreciation (August 1943) and ending with the cessation of hostilities in Europe have been considered. Detailed changes in tables of organization and equipment are not within the scope of this study.

2. *Present War Department Policy* enunciated in Field Manual 4-100, June, 1943, reference command and administration of Antiaircraft Artillery, is affected by recommendations contained in this study.

RESTRICTED

ORGANIZATION AND EQUIPMENT OF ANTIAIRCRAFT ARTILLERY UNITS

PART TWO

NARRATIVE REPORT OF COMMITTEE STUDY

CHAPTER 1

BASIC PRINCIPLES

3. Certain basic principles affecting organization are peculiar to the antiaircraft problem. An aircraft moves at high speeds. It can vary its speed greatly and can maneuver in three dimensions. One or a number of flights may be present at one time and these may divide. Operations can be carried out in daytime or at night. They can be quickly shifted from one area of activity to another. Aircraft effectiveness is strongly affected by antiaircraft artillery fire when over its target. These conditions make consideration of certain principles basic in the formation of antiaircraft artillery organization. Most important of these are:

a. Accuracy and volume of fire are essential to successful antiaircraft artillery defense. The target moves so fast that there is a minimum of time to prepare for fire. For the same reason, adjustment of fire for effect on a given target is impossible. A volume of fire quickly and accurately delivered is the only way to attain the necessary destruction.

b. Antiaircraft artillery must be present and alert before its target arrives. There is no time to go into artillery positions after an air attack begins. A firing unit not alert when the target comes is as ineffective as one not in position.

c. Antiaircraft artillery operates 24 hours every day. Aircraft does its destructive work in a few minutes. The attack may come without warning. The percent effectiveness of an antiaircraft artillery defense cannot be greater than the portion of time that it is manned and alert. Long periods of watching and waiting are more wearing on personnel than the short periods of strenuous action.

d. Antiaircraft artillery must be capable of rapid redeployment. It is impossible to redeploy antiaircraft artillery to meet a given air attack. But air forces can change their tactics at will and without previous indications of change. To defend against this capability with minimum loss of effectiveness, antiaircraft artillery must be capable of rapid redeployment over large areas.

e. Antiaircraft artillery must be able to fire ground missions. Tactical situations, local in time and place, will arise when all fire

power must directly support ground actions.[1] Antiaircraft artillery weapons have an enormous fire power. From these facts it follows that antiaircraft artillery weapons must be so designed and antiaircraft artillery units so organized that they can efficiently and promptly perform terrestrial missions.

---

1. In the Ardennes, for example, where front line troops were over-run, the antiaircraft artillery found itself containing the enemy.

RESTRICTED

CHAPTER 2

ADEQUACY OF PRESENT ANTIAIRCRAFT ORGANIZATION AND EQUIPMENT

4. The purpose of this chapter is to state briefly the weak and strong points in antiaircraft artillery organization and equipment as disclosed by experience in the European Theater. All types of antiaircraft artillery organizations established by tables of organization and equipment were assigned or attached to field armies and to the IX Air Defense Command in the European Theater.

5. Antiaircraft 90mm gun battalions were employed by the IX Air Defense Command in defense of ports, dumps, rail centers, critical bridges, etcetera. They were the backbone of the defense of Antwerp against pilotless aircraft. They were used by the armies for protection of critical bridges, defiles, supply areas, railheads, etcetera. One battalion was normally attached to each corps and was frequently used to fire on terrestrial targets.

a. Back of the army rear boundary Piloted aircraft gun targets appeared so infrequently that no real test was placed on equipment or organization. Even so, the communications equipment was inadequate and transportation in the semi-mobile units was insufficient to meet minimum needs. Lack of transportation to move semi-mobile gun battalions from rear areas delayed proper defense of Antwerp against pilotless aircraft at a critical time.[1]

b. Forward of the army rear boundary gun targets appeared frequently enough to test equipment and organization. The inadequacy of communications was acutely felt. Because of their inability to move, semi-mobile battalions could only be assigned to the more static defenses. When they had to be moved, transportation was borrowed from mobile units. This reduced the ability of mobile battalions to move quickly. This situation seriously effected efficiency in redeploying to meet the sudden German offensive in December, 1944. The four-gun battery proved a satisfactory and efficient fire unit. In most defenses eight batteries could have been grouped for administration. This would have been more efficient than having each battalion of four batteries a separate administrative unit.

c. In the defense of Antwerp against pilotless aircraft the 90mm gun was the primary weapon. Both mobile and semi-mobile battalions were used. Here again both wire and radio equipment had to be supplemented. This was thought to be an ideal employment for semi-mobile battalions, but it proved quite the contrary. The direction from which the primary V-1 attack came shifted frequently and guns had to be moved to meet new situations.[2] The German Ardennes breakthrough caused an

---

1. V-1 attacks on Antwerp began 13 October 1944. Orders to IX ADC to provide 3 gun battalions were issued by SHAEF, 15 October. Battalions arrived at Antwerp 22 to 25 October. Similar delays were experienced in later reinforcing the defenses. Unfortunately, records do not show the delays involved in shuffling battalions in rear areas to make as many mobile battalions as possible available for the defense of Antwerp. (F 15 Bibliography, Pars 5 and 6)
2. Only 211 V-1's which would have hit the vulnerable area (9%) escaped destruction by the defenses. Of these 38, or 14%, were launched from a new direction and passed before guns could be redeployed. (F 15 Bibliography, Par 7)

RESTRICTED

emergency requiring seven battalions. By stripping the entire command of all transportation not required for food and ammunition these arrived on time, though each had equipment from several other units.

d. Ground missions were fired by 16 of the 23 90mm gun battalions attached to corps. These missions were generally judged by field artillerymen to be very effective. A high rate of fire and long range, coupled with the accuracy of the 30-second fuse, enabled the 90mm gun to perform certain work not possible by normal field pieces. The gun is not, however, suitable for emplacement close to enemy lines on account of its high silhouette, and the length of time required to withdraw it from position.

e. The 90mm gun was effective against aircraft from 4,000 to 20,000 feet altitude. It made an enviable record in the defense of Antwerp. But its range was greater than that needed for the V-1. Fire had to be conducted at ranges from 6,000 to 8,000 yards, since the altitudes were only 1,000 to 3,000 feet. Gun elevations rarely exceeded 15 degrees, which made service of the piece difficult, and put great strain on the carriage, which is designed for high angle fire.

f. Gun laying and target detection equipment for the 90mm gun is not satisfactory. Present gun laying radar is technically capable of coping with most situations, but it is too bulky and heavy. No radar equipment is provided for long range target detection. This necessitates operation of the gun laying radar continuously for target detection. This practice is wasteful. Furthermore, the present gun laying set does not have sufficient range nor width of beam for proper target detection work.

6. Antiaircraft artillery automatic weapons battalions were used by the IX Air Defense Command and the armies to supplement antiaircraft artillery gun defenses. In the armies they were also used to protect objectives subject only to low altitude attack, such as the smaller bridges, dumps, troop concentrations and command posts. In the corps and divisions they defended similar objectives, but were used mostly to defend field artillery. Two battalions were normally attached to each corps and one to each division for these purposes.

a. In rear areas automatic weapons targets were so rare that experience did not provide a thorough operational test. Neither wire nor radio equipment was adequate, however, to establish a proper antiaircraft intelligence service. In the average battalion deployment, distances were such that transportation in semi-mobile battalions had to be supplemented to meet administrative requirements. Semi-mobile battalions could not be counted upon either to redeploy quickly in the rear area or to reinforce defenses in forward areas in order to meet a change in enemy tactics. This inability was acutely felt during the intense air activity in the Battle of the Bulge when the need to reinforce army antiaircraft was immediate and urgent.

b. The armies employed only mobile and self-propelled automatic weapons battalions. Although our air superiority was very great, antiaircraft automatic weapons equipment and organization in forward areas was sufficiently tested to indicate operational strength and weakness. The amount of transportation provided mobile and self-propelled battalions generally proved adequate, but the transport for the guns was unsuitable in type. Establishment of suitable antiaircraft artillery intelligence service was impossible with the communications means provided.

c. One mobile 40mm automatic weapons battalion was normally attached to each infantry division. In the average division experience 75 percent of the attached antiaircraft artillery battalion was used to

protect division artillery. Twenty-five percent protected defiles, bridges, troop concentrations, command posts, and dumps in that order of priority. An automatic weapons battery was universally used to protect the 155mm artillery battalion. Defense for the 105mm artillery battalions varied from a platoon to a battery. Only dangerously critical objectives other than field artillery received adequate protection. Because of its inability to fire effectively from traveling position, the towed 40mm gun could not defend columns on the march. A few division commanders considered one automatic weapons battalion inadequate for a division.[1] Occasionally an extra battalion was attached to a division for a special mission. In many cases corps antiaircraft artillery battalions furnished protection for the division main supply route. It is the common opinion of automatic weapons unit commanders, who served with divisions, that if we had not enjoyed a very great air superiority, one battalion of four automatic weapons batteries would have been unable to provide even minimum antiaircraft protection to an infantry division. This is especially true if a coordinated area defense of the division area is used.

d. One self-propelled antiaircraft automatic weapons battalion was attached to each armored division. In the average division experience, field artillery had first priority for antiaircraft artillery protection. One antiaircraft battery was almost invariably attached to each combat command. The remainder was used to protect tank columns and concentrations, defiles, division dumps and trains. The self-propelled battalion was very effective in protecting the armored division, but it is not considered adequate for situations in which there is normal air opposition.[2] But the half-track mount lacked the mobility and armor protection to enable it to follow tanks as closely in combat as was sometimes desirable. Its unduly high silhouette drew fire upon itself and the troops it supported. Radio equipment was not sufficient to provide proper control of the battalion. No wire was provided for the frequent semi-static periods when it was badly needed for command, administration and intelligence.

e. In the defense of Antwerp against pilotless aircraft automatic weapons battalions were used to a limited extent. The 40mm gun was ineffective against the V-1 on account of the small destructive power of its projectile.

f. The 40mm antiaircraft gun, primary weapon in the towed automatic weapons battalion, and the 37mm gun, largest caliber weapon in the self-propelled battalion, were effective against modern aircraft operating at speeds up to 350 miles per hour at altitudes from 500 feet to 3000 feet. They were ineffective against aircraft operating at speeds above 350 miles per hour on account of difficulties in tracking, and inadequate fire control equipment. They were ineffective against pilotless aircraft on account of the small destructive power of the projectile. Limited use was made of them in ground support roles. The rapid rate of fire and medium range of these pieces especially qualified them for close ground support. But their high silhouette exposes them and

---

1. The president of the General Board and a committee of officers have decided that one automatic weapons battalion of self-propelled 75mm automatic guns, supported by 20mm quadruple-mounted 20mm weapons, is sufficient for protection of the infantry or the armored division. (See Appendix VI for proposed organization).
2. At a conference held by the Theater General Board to discuss the composition of the post war Armored Division 11 of 12 commanders, experienced in armored warfare, expressed approval of an antiaircraft artillery regiment with twice the fire power of the present self-propelled battalion for the Armored Division.

discloses the general position of the supported troops. The towed 40mm gun can not be moved quickly enough to avoid its being destroyed by artillery fire in a very short time after it opens fire. Its use in a ground role was, therefore, limited to very special positions and cases where its sacrifice justified a calculated risk.

6. The quadruple mount, caliber .50 machine-gun, proved very effective against aircraft from the lowest altitudes up to 1,500 feet. It was vicious and effective in such ground roles as protection against surprise on reconnaissance and spraying hedgerows and brush areas to clear a way for infantry and artillery. It is a universal opinion among officers experienced with this weapon that it should have more armor protection and be mounted on a low-silhouette, self-propelled armored carriage in order to get maximum use from it. All its ground usefulness and much of its antiaircraft usefulness is lost when it is placed on a towed mount. The towed mount is difficult to maneuver and so is limited to positions near roads. This weapon is ineffective against pilotless aircraft.

7. Five antiaircraft searchlight battalions were employed in the European Theater. Records indicate that 32 percent of searchlight work was in homing aircraft, 30 percent in battlefield illumination, and 24 percent in miscellaneous missions other than illumination of antiaircraft artillery targets.[1] Only 14 percent was in illumination of antiaircraft artillery targets. There were no illuminations for 90mm gun targets reported. The lights were so dispersed in all types of employment that battalions were unable to function as integral units. Searchlight equipment was, however, highly satisfactory.

8. One very low altitude barrage balloon battalion landed on the beaches of Normandy on D-Day. One balloon battery was assigned to each landing force. One battery was employed at Utah Beach and two batteries at Omaha Beach, after the landing. These batteries operated substantially as separate units. Equipment was satisfactory except for the reel, which is so heavy that reels M-31 had to be substituted. Aircraft attacks on the beaches were so diminished by the end of September that the battalion was disbanded. A number of small detachments of very low altitude barrage balloons were used by First and Ninth United States Armies to protect bridges on the Rhine River. British material was employed and was found satisfactory. British balloons are the same as American, but the winches and reels are much lighter. The bridges defended were so far separated that no effort was made to organize these detachments into a higher balloon formation. Each detachment acted separately so far as other balloon activities were concerned. The lower Rhine bridges were so critical that balloon barrages were maintained from the time of the crossing until the end of the campaign.

9. The group organization as now constituted received so much unfavorable comment from commanders of all arms that it has been made the subject of a separate report by the Theater General Board.[2] In view of this fact, only a brief discussion of the antiaircraft artillery group is included here. Thirty-nine antiaircraft artillery groups were employed in the European Theater. Nine groups were assigned to IX Air Defense Command for antiaircraft artillery defenses back of the army rear boundary and 30 were assigned to the armies. One group was normally assigned or attached to each corps, where it usually commanded one attached gun battalion and two automatic weapons battalions. The groups with corps gave a varying amount of supervision to the automatic weapons

---

1. P. 15, Bibliography Par 9. (See Responses of Searchlight Battalions to Par 23 of questionnaire).
2. Report of The General Board, USFET, "Effectiveness of AAA Groups as Compared with AAA Regiments", Study No 39.

R E S T R I C T E D

battalions which were attached directly to divisions. The relationship between the antiaircraft artillery group in corps and the antiaircraft artillery battalion in division was ill-defined and varied greatly. The groups with the armies were attached to the army antiaircraft brigade. The average group command in army brigades and IX Air Defense Command was four battalions. Both gun and automatic weapons battalions were attached to all groups. The situation did not permit moving forward a group with its attached battalions as an integral command. The only recourse was to use the inherent flexibility of the group and move it forward by detaching its rear battalions and attaching those leapfrogged from rear of the brigade. In the eleven months of the campaign, an average of 37 attachments was made to groups forward of the army rear boundary; the minimum was 7, the maximum was 67.[1] Flexibility approached fluidity. Group commanders often found it difficult to keep track of their attached battalions. It was even more difficult to know the capabilities of the new units in time to effect necessary corrective action before the units left the group command. The result was that the group had no unity or continuity of command. The complexity of command and communication which resulted never produced the most efficient results. Due to the impermanency of relations with and between attached battalions, there was no such force as esprit de corps in the group.

10. The brigade was the highest table of organization and equipment echelon of antiaircraft artillery command employed in the European Theater. Seven of the 14 brigades employed in the European Theater were assigned to the IX Air Defense Command for protection of air forces and communications zone installations. One was assigned to each army (including the French First Army). One was assigned to a corps, instead of the normally attached group, and one was employed in non-antiaircraft work. The average number of groups attached to brigades was one-and-one-half with a maximum of five. In some cases battalions were attached directly to brigades. Attachment of groups to brigades was considerably more permanent than was the attachment of battalions to groups. The result was better mutual understanding between these two echelons. In some cases brigades had better opportunity to deal successfully with battalions than the intermediate group. Experience clearly indicates the need for the brigade. The present table of organization establishes the brigade as a tactical command. Since the group was also a tactical command the widely separated antiaircraft battalions were left to shift for themselves administratively. The result was that groups and brigades had to assume certain administrative responsibilities. Since brigades were more permanent in their association with battalions, much of this administrative work fell upon them. The necessary personnel and equipment had to be acquired by improvisation, and a lower standard of performance than justified had to be accepted. The brigade table of organization and equipment is also inadequate to operate with the desired degree of alertness and efficiency 24 hours a day. Present authorized allowances of communication equipment and personnel are not sufficient. Table of organization operations personnel is so inadequate that an effort was made to correct the deficiency by establishing an antiaircraft artillery operations detachment for each brigade. This improved the situation, but it is far from a complete solution to the problem.

11. Antiaircraft artillery operations detachments were organized to correct the operational deficiencies of the brigade. Established as separate detachments, they were attached to brigades or groups. They can also continue operations in a given defense if the command echelon is changed at a critical time. They proved indispensible to brigades. In theory they are excellent, but their means are woefully inadequate. The personnel provided is sufficient only for one manning detail.

---

1. P 15 Bibliography, Par 7.

Sufficient personnel is required for operation 24 hours a day, over long periods of time. Communications equipment is inadequate in quantity. Deficiencies in radio are especially felt because the operations room is a communications center for all command and intelligence channels in the brigade.

12. Army antiaircraft artillery special staff sections were employed in all armies. In one case a brigadier general headed the section, but in all others the antiaircraft artillery officer was a colonel. In every case a brigadier general commanded army antiaircraft troops. In three of four cases, therefore, the officer advising the army commander on policy and greatly influencing decision was junior in grade to the one who commanded the troops affected. In every case the antiaircraft troop commander had to deal with his next senior in command through a third party, the army antiaircraft artillery officer. The army antiaircraft brigade commander, whose operations had to be closely coordinated with antiaircraft artillery troops in the attached corps, had no authority to deal directly with them but had to deal through the army antiaircraft artillery officer. Obviously the system was slow and its effectiveness depended a great deal on personalities.

13. An army antiaircraft command as authorized in table of organization and equipment 44-200-1, 26 October 1944, was partially organized in one army in November 1944, but it continued to function as an enlarged antiaircraft artillery staff section. The army antiaircraft artillery command was not tested in actual operations in the European Theater.

14. Army group headquarters are not fixed by tables of organization, and, consequently, the method of handling antiaircraft artillery matters differed between the 6th and 12th Army Groups.

a. In the 6th Army Group there was no antiaircraft artillery special staff section. One officer in the G-3 section advised and assisted the army group G-3 in the establishment of antiaircraft artillery policies. Intelligence and supply policies were established by army group G-2 and G-4. Operational and administrative details were handled directly between the antiaircraft artillery units, and the commanders and supply agencies concerned.

b. In the 12th Army Group there was an antiaircraft artillery special staff section of nine officers and nine enlisted men. This section established and directed operational policies, conducted intelligence surveys, and aided the army antiaircraft artillery staff officers and commanders in technical and supply matters.

15. The IX Air Defense Command had all antiaircraft artillery troops behind the army rear boundary assigned to it. This organization was a part of the Ninth Air Force. In order, therefore, to transfer antiaircraft artillery troops between areas back of army rear boundaries and the armies, arrangements had to be made by army group through Air Defense Division, Supreme Headquarters Allied Expeditionary Forces, and Ninth Air Force with IX Air Defense Command. Since the Air Defense Command was responsible for defense of communications zone installations, concurrence was obtained if time permitted, from the theater antiaircraft officer before troops were moved.

16. There was no theater antiaircraft artillery command in the European Theater. An antiaircraft artillery officer advised the Commanding General, Communications Zone, on antiaircraft defense priorities. The defense was furnished by the IX Air Defense Command.

17. The Air Defense Division, Supreme Headquarters Allied Expeditionary Forces had to approve and direct movement of antiaircraft

troops between Army Groups and IX Air Defense Command before redeployment between those major commands could be effected. This Air Defense Division was a joint Anglo-American planning and policy body. It exercised no command. Orders for the troop movement had to be issued by Headquarters European Theater of Operations. The process of moving antiaircraft troops from one major command to another in the European Theater was a long and cumbersome one.

RESTRICTED

CHAPTER 3

FUTURE DEVELOPMENTS IN AIR ATTACK

18. Future development in antiaircraft is a direct function of developments in planes, guided missiles, and rockets. This follows from the purely defensive nature of all antiaircraft activity. To understand future developments in antiaircraft artillery it is, therefore, necessary to analyze future probable developments in these means of attack.

19. Supersonic-velocity rockets and guided missiles are just emerging from the experimental stage. There is now no antiaircraft equipment or organization for defense against them. It is probable that the defense must be by means of guided missiles. There is little doubt that in this field lie the major antiaircraft problems of the future. Development of a means to combat these missiles is of most urgent importance. It must have the immediate attention of the best scientific minds in the country. Organization on a national basis is necessary to combat this menace.

20. Piloted aircraft and low velocity guided missiles still are the major means of attack by air. Five years of concentrated effort were required to bring the supersonic-velocity rocket to its present limited state of development. Some time will be required before it can supplant piloted aircraft or even supplement it seriously in long range work. It probably will never replace manned aircraft in observation, liaison and transport.

a. Jet Propelled piloted aircraft passed the experimental stage in this war. They make possible greater speeds and higher altitudes. In the future bombers will try to avoid antiaircraft artillery fire by operating above its effective range. Altitudes from 40,000 to 50,000 feet can reasonably be predicted. With radar sights, bombing can be done from these heights more accurately than from 15,000 feet with present sighting equipment. With better photographic equipment, reconnaissance planes will also operate at greater speeds. But there is a practical limit beyond which piloted aircraft operating against ground troops cannot go. Present antiaircraft artillery is not capable of dealing effectively with the fastest piloted aircraft. But it is expected that antiaircraft guns or rockets will be devised which would be effective against any piloted aircraft, or missiles under the speed of sound. Faster and more fully automatic weapons will be required. Calibers will have to be increased to offset such improvements in aircraft as armor protection for vital parts, less volatile fuel, and multiple controls.

b. Low-velocity guided missiles have proved practicable from the point of view of technical operation. They have not proven effective from the military point of view, as is well attested by the 96 percent effectiveness finally attained by antiaircraft artillery in the defense of Antwerp against V-1 attacks. These missiles are not likely to be used extensively in the future. They almost certainly will not be used in areas defended by antiaircraft artillery.

c. Attacks by rockets operating at speeds less than that of sound will probably be defeated by antiaircraft artillery guns or rockets. Supersonic-velocity rockets, however, will very likely replace the present slow speed ones in order to neutralize this defensive possibility. Defense against these will, of course, present the same general scientific difficulties as other supersonic-velocity missiles.

RESTRICTED

CHAPTER 4

CONCLUSIONS AND RECOMMENDATIONS

21. Conclusions. From the experiences in antiaircraft operations in the European Theater it is concluded that:

a. The present antiaircraft artillery battalions are tactically sound. They are administratively wasteful because of their small size. The large number of different types of battalions complicates administration, supply and maintenance.

b. The antiaircraft artillery group was unsatisfactory. Tactically, the group with its normal attachments, is too large to move as an integral command and too small to establish an area defense within which its attached units can be redeployed to meet normal changes in air situations. Administratively it is insufficient.

c. The antiaircraft artillery brigade was tactically sound. It was deficient in operational and administrative capacity.

d. There is need for an antiaircraft artillery division at army level which also performs army antiaircraft special staff work.

e. There is need for an antiaircraft artillery section in the army group to coordinate and provide for the defenses of the armies.

f. There is need for unified command of all antiaircraft artillery behind army rear boundaries.

g. There is need for a strong antiaircraft artillery staff section, headed by a general officer, on the staff of the theater commander; this section to be responsible for coordination of all antiaircraft artillery activities in the entire theater for the best interests of all Ground, Air, and Service Forces.

h. All antiaircraft artillery gun units in an active theater of operations should be completely mobile, suitably armored and capable of quick and effective employment against terrestrial targets.

i. All automatic weapons in an active theater of operations should be self-propelled on low-silhouette full-track armored carriages. Standard weapons and carriages would be more economical and would facilitate employment, administration, supply and maintenance.

j. There will be a need in the near future for an antiaircraft artillery weapon capable of greater effective altitude than the present 90mm gun.

k. There already exists a need for a radar-directed automatic weapon with more destructive power and greater range than the present 40mm gun.

l. The present caliber .50 machine-gun is not effective against guided missiles and pilotless aircraft.

m. Gun laying and target detection equipment must be improved in performance and lightened in weight.

RESTRICTED

n. Radio equipment must be improved technically, standardized, and lightened in weight.

o. There is no longer an antiaircraft artillery need for searchlights.

p. There is need for small mobile units of very low altitude barrage balloons, with hand transportable equipment.

q. There is urgent need for the immediate development and mass production of guided missiles for combat of supersonic-velocity rockets and missiles. It is entirely possible that this type of weapon may replace guns in all antiaircraft roles.

22. Recommendations. It is recommended that:

a. The basic unit of antiaircraft artillery command and administration be a regiment of two battalions; the battalions homogeneous as to armament and of substantially the same size as the present antiaircraft artillery separate battalions. (Proposed organization is indicated in Appendix II).

b. The present antiaircraft artillery group be abandoned.

c. The antiaircraft artillery brigade be made a complete administrative and tactical unit capable of continuous operation 24 hours per day. (Proposed organization is indicated in Appendix III).

d. The army antiaircraft artillery special staff section be abolished, and an antiaircraft artillery division be provided for each field army for the dual purpose of commanding the antiaircraft artillery troops of the army and to replace the present army antiaircraft artillery special staff section. (Proposed organization is indicated in Appendix IV).

e. An antiaircraft artillery staff section, headed by a general officer, be established in each army group to coordinate and provide for the defense of the armies.

f. An antiaircraft artillery command be established over all antiaircraft artillery troops in the theater behind the armies. (Proposed organization is indicated in Appendix V).

g. A strong antiaircraft artillery staff section, headed by a general officer, be established on the staff of the theater commander; this section to be responsible for coordination of all antiaircraft artillery activities in the entire theater for the best interests of all Ground, Air, and Service Forces.

h. All antiaircraft artillery gun units in an active theater of operations be completely mobile, suitably armored and capable of quick and effective employment against terrestrial targets.

i. All automatic weapons in an active theater of operations be self-propelled on low-silhouette, full-track, armored carriages.

j. An antiaircraft artillery weapon, effective for altitudes up to 50,000 feet, be provided.

k. A high muzzle velocity gun of approximately 75mm caliber, fully automatic, and radar operated, be provided to replace the present 40mm automatic weapon.

RESTRICTED

l. The present quadruple-mounted caliber .50 machine gun unit be replaced by a similar gun capable of firing an explosive projectile. A 20mm, quadruple-mounted weapon is recommended.

m. Radar gun laying equipment be improved in performance and lightened in weight.

n. Long-range and low-level electronic target detection equipment be provided.

o. Standardized radio equipment of lighter weight, improved performance, and longer range be provided.

p. Use of searchlights as antiaircraft artillery equipment be discontinued.

q. Separate batteries or detachments of very low altitude barrage balloons, with hand transportable equipment be provided.

r. Establishment of a major organization, within the national defense structure, to be charged with responsibility for:

(1) Development and production of guided missiles suitable for defense against long-range guided missile and rocket attack.

(2) Development and production of supersonic-velocity guided missiles and rockets suitable for offensive action at long range.

(3) Organization and training of units, established and equipped, for offensive and defensive operations with long-range rockets and guided missiles.

RESTRICTED

PART THREE

BIBLIOGRAPHY

1. Antiaircraft Artillery Notes, Headquarters European Theater of Operations No. 4, 15 November 1944 to No. 32, 23 May 1945, No AG File Reference. A compilation of important AAA information gathered from major commands in the European Theater.

2. Daily Summary of Events, Office of the Theater Antiaircraft Artillery Officer, European Theater of Operations, 30 September 1944 to 12 May 1945; No A.G.C. File Reference. A daily record of events in the AAA section, European Theater of Operations.

3. Antiaircraft Artillery Operations Memoranda, Office of the Antiaircraft Officer, European Theater of Operations, File AG 319.1.

4. Army Ground Forces Reports, War Department Observers Board, European Theater of Operations. No AGO File Reference. Contains many references to AAA equipment and operations considered by the AAA member of the W.D. Observers Board to require or deserve attention from Army Ground Forces.

5. An Account of Continental Crossbow Operation, 1944 - 1945, produced by Air Defense Division, Supreme Headquarters Allied Expeditionary Forces. No AGO File Reference. This is a complete general report on German attacks by pilotless aircraft and the defenses against those attacks.

6. Operations Reports, Headquarters Antwerp "X", 14 December 1944 to 1 May 1945. No AGO File Reference. Antwerp "X" was the official designation of the antiaircraft defense of Antwerp against V-1 attack.

7. "The Story of Antwerp X", published by Headquarters, 50th Antiaircraft Artillery Brigade. No AGO File Reference. 50th Brigade staffed the defense "Antwerp X". This is a narrative and statistical summary of the defense of Antwerp against V-1.

8. Minutes of a Conference on Composition of the Armored Division, The General Board, 7 November 1945. No AGO Reference No.

9. Antiaircraft Artillery Questionnaire, Headquarters European Theater of Operations, 11 June 1945, AG 472 OPGA, and responses thereto. This questionnaire covers all phases of Antiaircraft Artillery. Responses are filed from:

Headquarters, 12th Army Group.
Headquarters, Third, Seventh, Ninth and Fifteenth Armies.
13 Antiaircraft Artillery Brigades.
36 Antiaircraft Artillery Groups.
32 Antiaircraft Artillery Gun Bns., Mobile.
15 Antiaircraft Artillery Gun Bns., Semi-mobile.
63 Antiaircraft Automatic Weapons Bns., Mobile.
20 Antiaircraft Automatic Weapons Bns., Semi-mobile
22 Antiaircraft Automatic Weapons Bns., Self-propelled.
5 Antiaircraft Artillery Searchlight Bns.

10. Final Report of Operations, 320th Very Low Altitude Barrage Balloon Battalion, 9 October 1944, File AG 452.3.

R E S T R I C T E D

11. Air Defense Review, Air Defense Division, Supreme Headquarters, Allied Expeditionary Forces. No AGO File Reference. This is a compilation of important and interesting information on all phases of antiaircraft activity in the European Theater.

12. Functional Organization and SOP, IX Air Defense Command. No AGO File Reference. This is a lengthy history and study of the IX Air Defense Command, prepared by the Deputy Commander for Antiaircraft Artillery, IX Air Defense Command.

NOTE: All references listed in the above bibliography are filed in the records of the Antiaircraft Artillery Section, The General Board, USFET.

RADIO EQUIPMENT IN ANTI AIRCRAFT ARTILLERY ORGANIZATION

Under date of 11 June 1945, Headquarters European Theater, in paragraph 33 c (1) of its post-hostilities questionnaire on Antiaircraft Artillery, asked the question: "Are the types and numbers of radio sets authorized by present tables of equipment adequate for M.A.L. and early warning (In addition to their tactical and administrative use)?" The following tabulation shows the response to the question.

	Brigades	Groups	Gun Bns. (M)	Gun Bns. (SP)	AW Bns. (M)	AW Bns. (SP)	Bns. (SP)	Totals
1. No. of units in European Theater.	14	39	32	18	63	21	25	212
2. No. of units that did not reply.	1	3	0	3	0	1	2	10
3. No. of units saying "No Comment".	1	3	0	2	2	2	3	13
4. No. of units saying "Yes" (radio adequate).	0	5	1	2	1	3	4	16
5. No. of units saying "No" (radio not adequate).	8	23	23	8	36	6	12	116
6. No. of units not answering directly, but expressing dissatisfaction with radio.	4	5	8	3	24	9	4	57
7. Total No. of units dissatisfied with radio (Line 5 + line 6).	12	28	31	11	60	15	16	173
TOTALS (Lines 2 + 3 + 4 + 7 = Line 1).	14	39	32	18	63	21	25	212

The majority of answers are not so phrased that a profitable study of the causes of complaint can be made. But lack of range, weight, bulk, and noise were the most common complaints. In all types of units, except self-propelled battalions, complaints of poor performance exceeded those of inadequacy of numbers of sets, though there appears a general plea for more sets. In the self-propelled battalions, complaints of insufficiency of numbers of sets exceeded complaints of poor performance.

RESTRICTED

RESTRICTED

PROPOSED ORGANIZATION OF ANTIAIRCRAFT ARTILLERY REGIMENT

(AUTOMATIC WEAPONS)

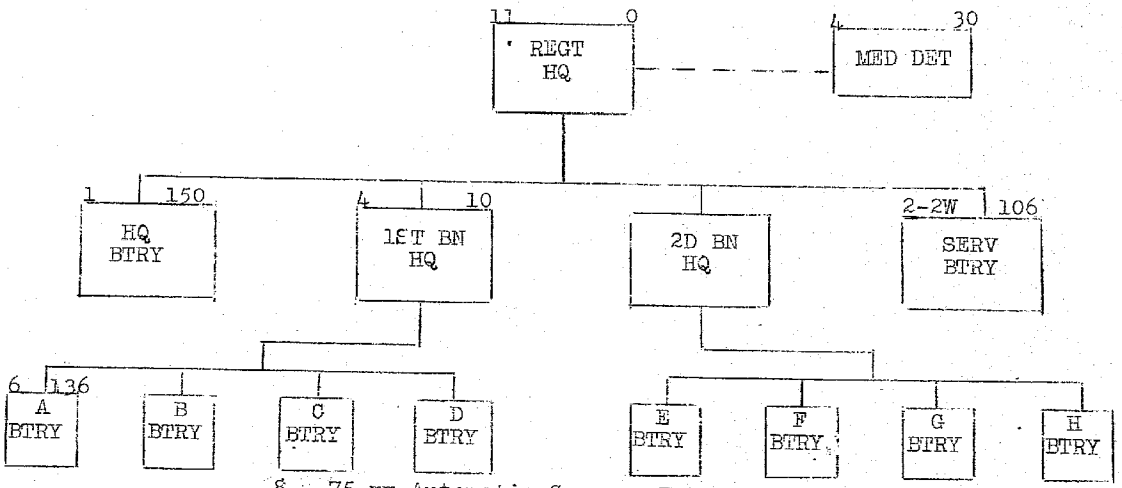

8 - 75 mm Automatic Cannon, Full-Track
8 - 20 mm 4-Barrel Automatic Cannon, Full-Track) each btry identical

SUMMARY

Personnel (Approx.)

74 Officers
2 Warrant Officers
1394 Enlisted Men

Armament

64 75 mm Automatic Cannon, full-track
64 20 mm 4-barrel Automatic Cannon, full-track

Vehicles (Approx.)

52 Trucks, cargo, with trailer
82 Trucks, medium and light

PROPOSED ORGANIZATION OF ANTIAIRCRAFT ARTILLERY REGIMENT

(GUNS)

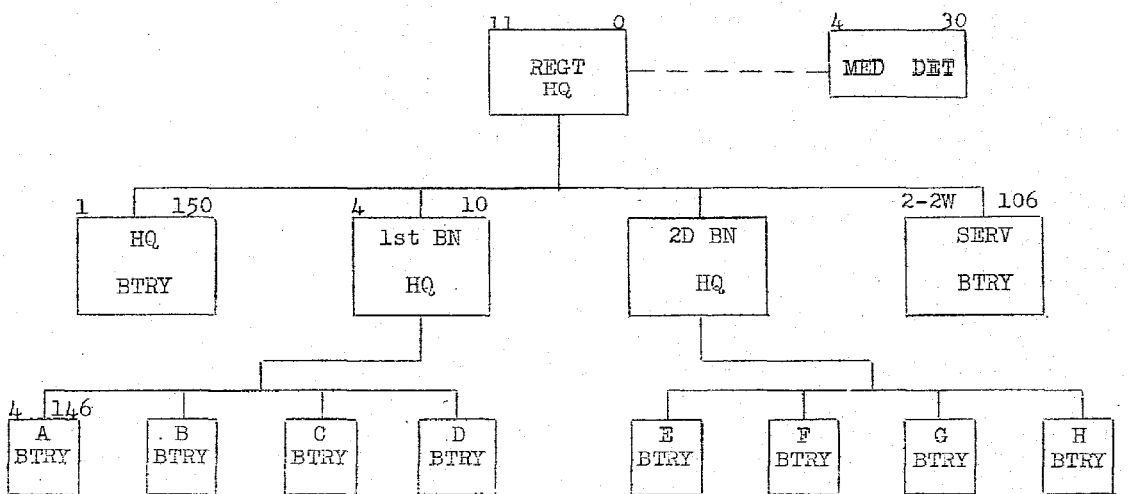

4 - 90 mm Gun)
4 - 20 mm 4-Barrel Automatic Cannon, Full-track) each btry identical

SUMMARY

Personnel (Approx.)	Armament	Vehicles (Approx.
59 Officers	32 - 90 mm Gun	40 Tractors, High Speed, 18 ton
2 Warrant Officers	32 - 20 mm 4-barrel Automatic Cannon, full-track	12 Trucks, 4-5 ton Tractor
1474 Enlisted Men		14 Trucks, K-60
		84 Trucks, medium
		66 Trucks, medium and light

PROPOSED ANTIAIRCRAFT ARTI
BRIGADE HEADQUARTERS

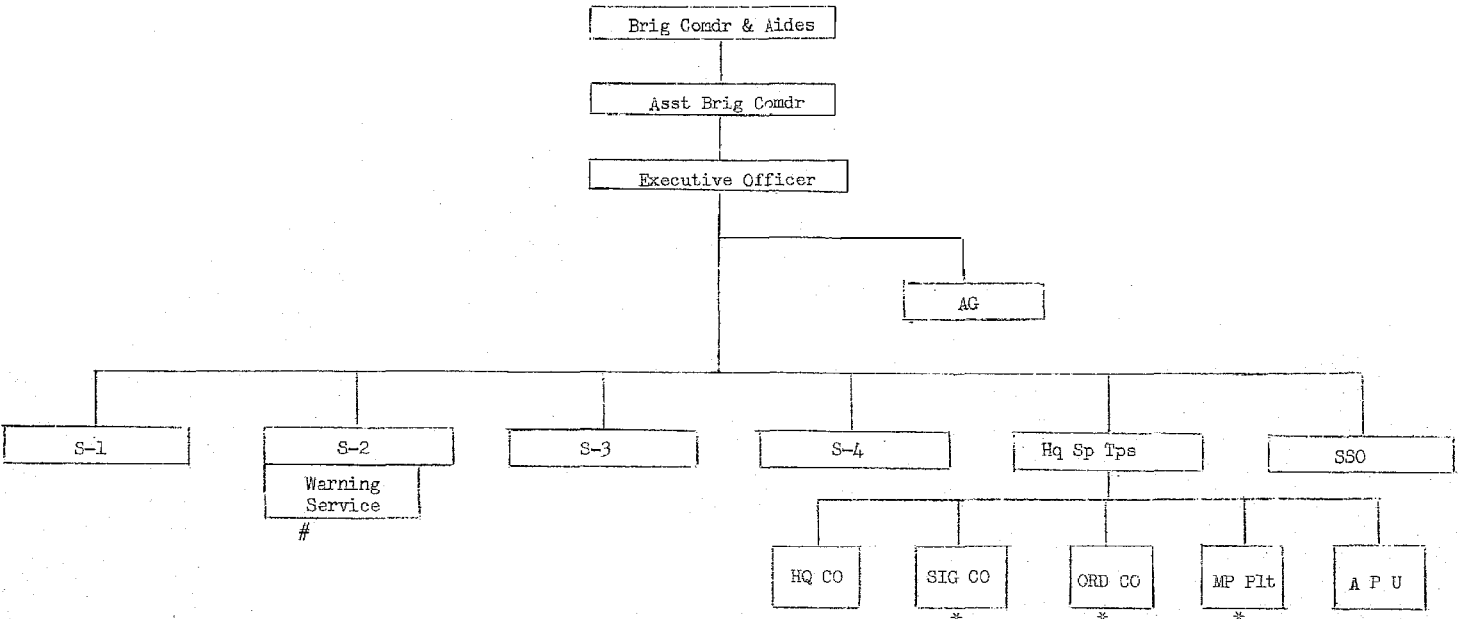

Personnel to operate service will be provided by Signal Company
* C.O. also performs Special Staff functions

PROPOSED ANTIAIRCRAFT ARTILLERY DIVISION

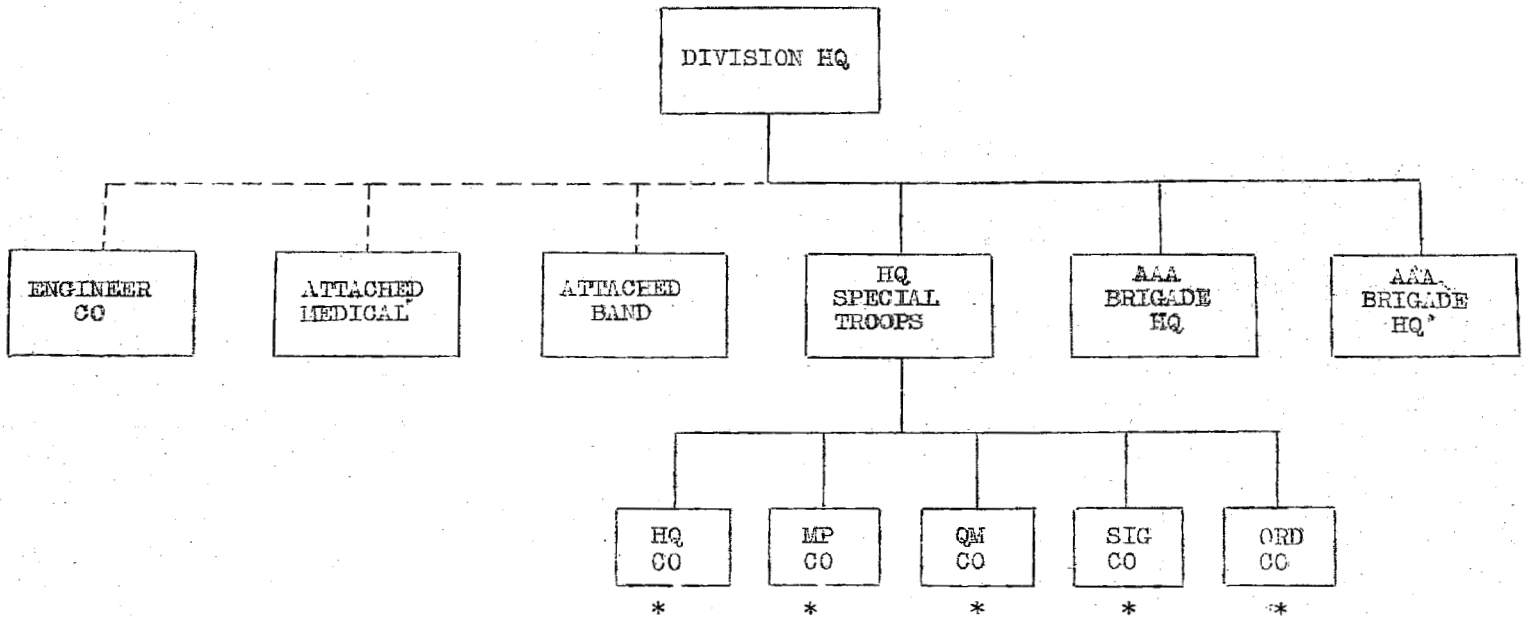

* C.O. also performs Special Staff Work for the Division

PROPOSED ANTIAIRCRAFT ARTILLERY
DIVISION HEADQUARTERS

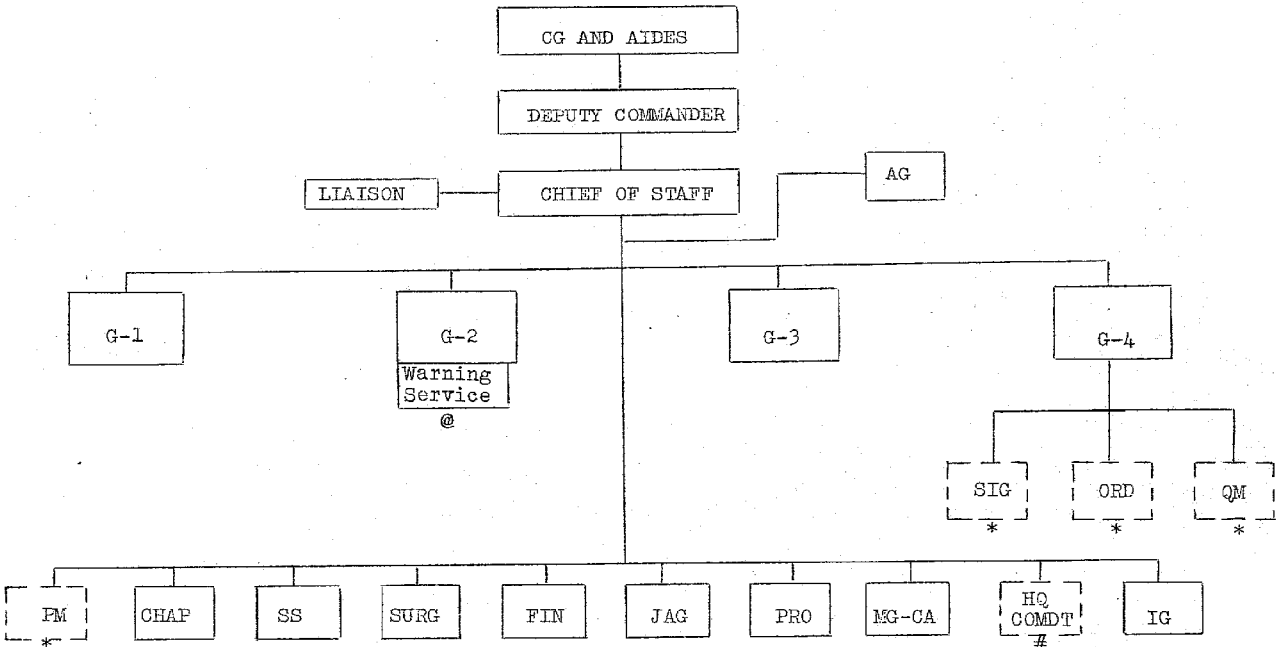

* Also commands special troop unit of his arm.
\# Is also C.O. Special Troops.
@ Troops for air warning furnished by Signal Company.

RESTRICTED

PROPOSED ANTIAIRCRAFT ARTILLERY COMMAND

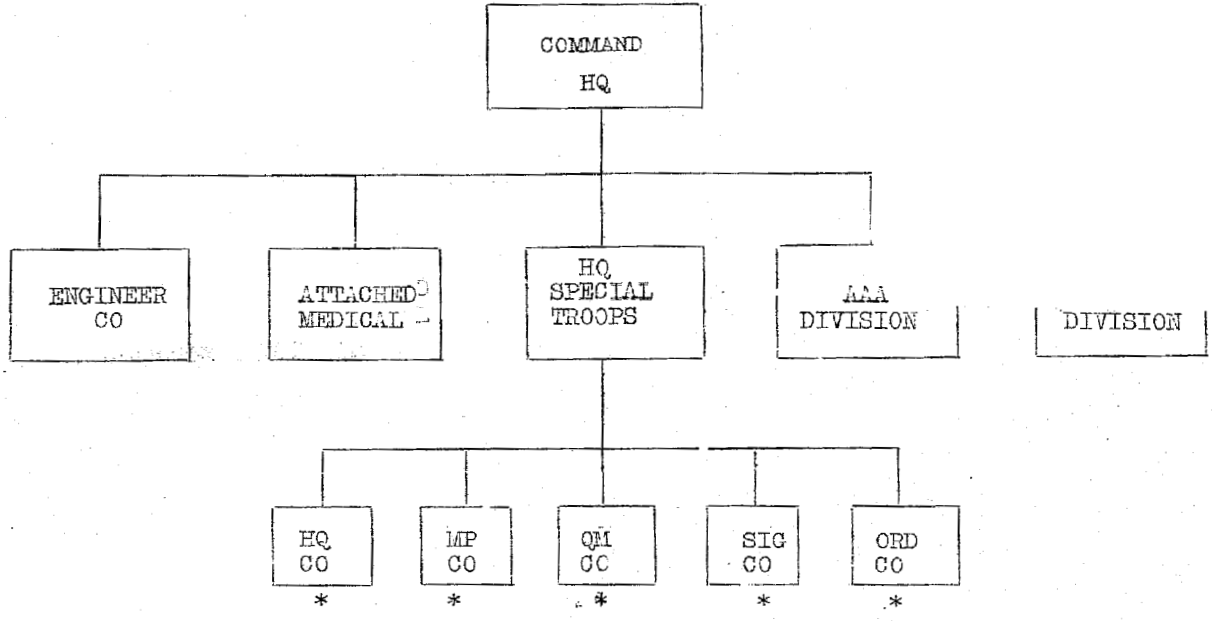

* C.O. also Performs Special Staff Work for the Corps

PROPOSED ANTIAIRCRAFT ARTILLERY
COMMAND HEADQUARTERS

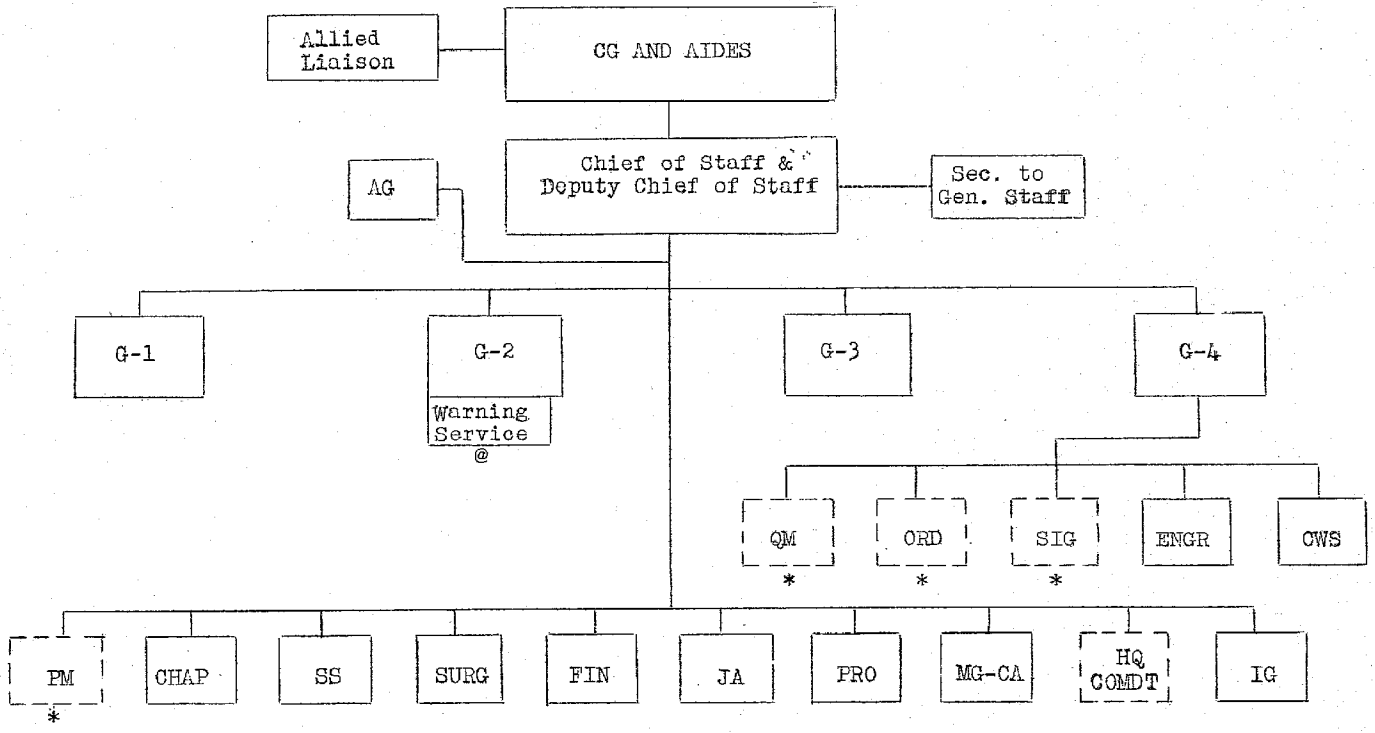

* Also commands special troop unit of his arm.
\# Is also C.O. Special Troops.
@ Troops for air warning furnished by Signal Company.

PROPOSED ORGANIZATION OF ANTIAIRCRAFT ARTILLERY

SEPARATE AUTOMATIC WEAPONS

BATTALION

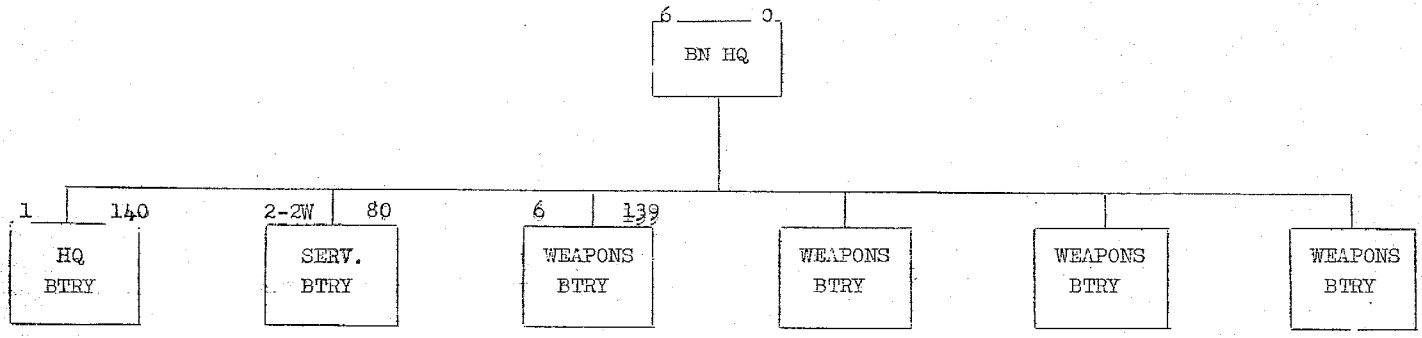

8 - 75 mm Guns, Automatic
8 - 20 mm Quad-Mount Guns } Applies to each weapons btry

SUMMARY

Personnel

33 Officers
2 Warrant Officers
776 Enlisted Men

Equipment

32 Guns, 75 mm, automatic
32 Quadrupled-barreled, 20 mm guns
15 Trucks, cargo, medium
13 Personnel carrier, armored, track
16 Light Recon. vehicles

DECLASSIFIED